Cassina

395-396 P22

Catalogue **I Contemporanei** Year of design **2013** Year of production **2013** / **2014**

Armchair with shell in foam with an iron frame and elastic seat straps; base American walnut, in natural ashwood or in polished aluminium alloy or matte painted in black, chestnut brown or beige-grey. Removable fabric or leather upholstery through zips sewn into the upholstery; option of choosing different fabric and leather set combinations for the internal and external parts, according to specific patterns. A footrest accompanies the armchair for greater comfort.

Gallery

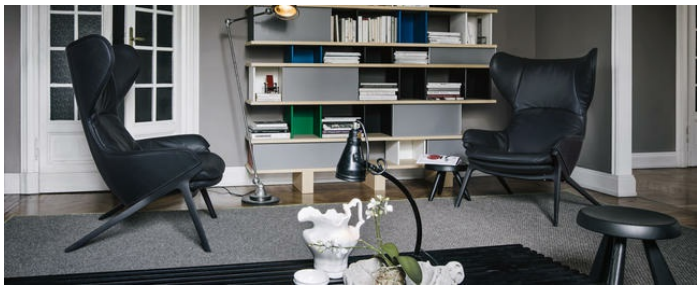

Dimensions

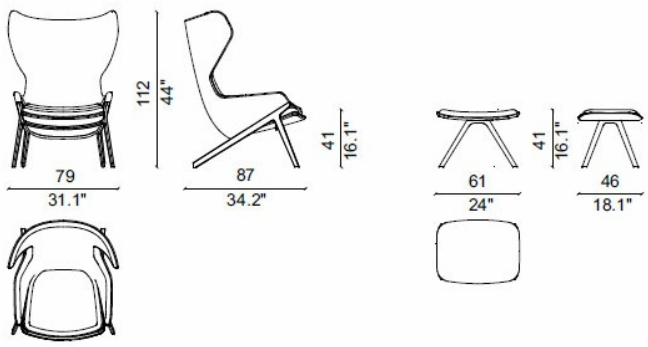

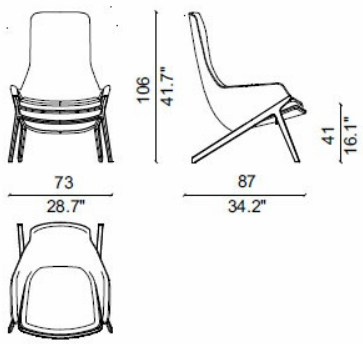

Authenticity

All the models in the Cassina collection, by merit of their artistic content and particular creative character, are protected by copyright, a legal institution that is universally recognised and safeguarded; legal protection is assured for the whole life-span of the author and for 70 years after his/her death (or the death of the last surviving co-author).

Designer

Patrick Norguet

French designer Patrick Norguet, close to fashion world through his collaboration with Louis Vuitton, Lanvin, Guerlain and Christian Dior, completes his personal formation at the EDSI where he built up a unique approach based on eclecticism and a thorough knowledge of materials and manufacturing processes. In 2000 he opened his personal design office; nowadays, he is involved in industrial and interior design, dedicating himself to create also exhibitions for Van Cleef and Renault. Awarded as “Designer of the Year” in 2005, Norguet belongs to that generation which is making known the “french touch” on the international stage; with his designs he perfectly interprets Cappellini’s theory of the union between fashion and design, projecting items of great presence for both sectors, working for innovation but keeping the greatest semplicity. For brands such as Lancel, Cappellini, Poltrona Frau, Flaminia, Frighetto, Molteni&C, Gebruder Thonet Vienna, Maxdesign, Modus, Artifort and Bernhardt he loves to work on emotions and intuition, finding alternative slants on everyday objects and their specific settings.
Some of his works are part of the permanent collections of prestigious museums, such as the Museum of Modern Art in New York.

Finishes

DIVINA 3

DIVINA 3 106 | DIVINA 3 173 | DIVINA 3 236 | DIVINA 3 246 | DIVINA 3 334 | DIVINA 3 346 | DIVINA 3 376 | DIVINA 3 393

DIVINA 3 426 | DIVINA 3 462 | DIVINA 3 526 | DIVINA 3 536 | DIVINA 3 584 | DIVINA 3 626 | DIVINA 3 636 | DIVINA 3 652

DIVINA 3 662 | DIVINA 3 666 | DIVINA 3 676 | DIVINA 3 686 | DIVINA 3 692 | DIVINA 3 696 | DIVINA 3 742 | DIVINA 3 756

DIVINA 3 782 | DIVINA 3 826 | DIVINA 3 836 | DIVINA 3 846 | DIVINA 3 856 | DIVINA 3 876 | DIVINA 3 886 | DIVINA 3 893

DIVINA 3 922 | DIVINA 3 936 | DIVINA 3 944 | DIVINA 3 966

FIELD

FIELD 142 | FIELD 172 | FIELD 192 | FIELD 222 | FIELD 232 | FIELD 242 | FIELD 252 | FIELD 432

FIELD 542 | FIELD 662 | FIELD 682 | FIELD 752 | FIELD 772 | FIELD 942 | FIELD 982

PANORAMA 1

DIVINA MD 13F286

LERICI 13F826

LERICI 13F827

LERICI 13F829

PORTOFINO 13F710

SAVONA 13F817

SONAR 2 13F807

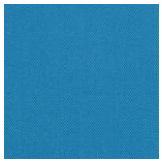
STEELCUT 2 13F702

STEELCUT TRIO 2 13F840

STEELCUT TRIO 2 13F843

VICO 13F835

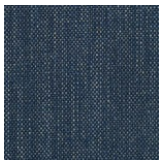
VICO 13F836

WATERBORN 13F811

WATERBORN 13F815

WATERBORN 13F816

PANORAMA 2

DIVINA MD 13F287

DIVINA MD 13F288

DIVINA MD 13F289

DIVINA MD 13F290

PORTOFINO 13F711

SAVONA 13F818

SONAR 2 13F808

STEELCUT 2 13F701

STEELCUT 2 13F705

STEELCUT TRIO 2 13F841

STEELCUT TRIO 2 13F844

VICO 13F837

WATERBORN 13F812

PANORAMA 3

LERICI 13F828

PORTOFINO 13F712

PORTOFINO 13F713

SAVONA 13F819

STEELCUT 2 13F703

STEELCUT 2 13F704

STEELCUT 2 13F706

STEELCUT TRIO 2 13F842

STEELCUT TRIO 2 13F845

VICO 13F838

WATERBORN 13F813

WATERBORN 13F814

PELLE NATURALE + PELLE EXTRA

EXTRA 13Y244 Sabbia

EXTRA 13Y246 Terra

EXTRA 13Y251 Rosso Bulgaro

EXTRA 13Y253 Nero

EXTRA 13Y255 Prugna

EXTRA 13Y257 Titanio

EXTRA 13Y258 Fumo

EXTRA 13Y260 Muschio

EXTRA 13Y274 Ruggine

EXTRA 13Y276 Avorio

EXTRA 13Y280 Grigio Caldo

EXTRA 13Y281 Marrone

EXTRA 13Y282 Caffelatte

EXTRA 13Y283 Orzo

EXTRA 13Y284 Deserto

EXTRA 13Y285 Cenere

EXTRA 13Y286 Bianco Sporco

NATURALE 08 13Z300 Naturale

NATURALE 08 13Z302 Marrone

NATURALE 08 13Z303 Caffè

NATURALE 08 13Z304 Grafite

NATURALE 08 13Z305 Nero

NATURALE 13Z200

PELLE SCOZIA

13X201 Ambra

13X202 Testa di moro

13X247 Bianco

13X250 Vermiglio olandese

13X251 Rosso ocra

13X259 Cinabro verde

13X266 Beige

13X267 Grigio perla

13X268 Vinaccia

13X269 Panna

13X270 Avorio

13X276 Metallo

13X282 Tabacco

13X285 Cacao

13X290 Carminio

13X295 Corrida

13X321 Marrone

13X322 Nocciola

13X323 Caffelatte

13X324 Tortora

13X325 Orzo

13X326 Deserto

13X327 Grigio medio

13X328 Cenere

13X329 Bianco sporco

13X606 Grafite

REMIX

REMIX 113 | REMIX 123 | REMIX 133 | REMIX 163 | REMIX 183 | REMIX 223 | REMIX 233 | REMIX 433

REMIX 643 | REMIX 653 | REMIX 743 | REMIX 773 | REMIX 823 | REMIX 923 | REMIX 933

STEELCUT TRIO 2

STEELCUT TRIO 2 105 | STEELCUT TRIO 2 133 | STEELCUT TRIO 2 153 | STEELCUT TRIO 2 195 | STEELCUT TRIO 2 205 | STEELCUT TRIO 2 225 | STEELCUT TRIO 2 245 | STEELCUT TRIO 2 253

STEELCUT TRIO 2 283 | STEELCUT TRIO 2 325 | STEELCUT TRIO 2 353 | STEELCUT TRIO 2 383 | STEELCUT TRIO 2 413 | STEELCUT TRIO 2 415 | STEELCUT TRIO 2 453 | STEELCUT TRIO 2 465

STEELCUT TRIO 2 515 | STEELCUT TRIO 2 553 | STEELCUT TRIO 2 565 | STEELCUT TRIO 2 645 | STEELCUT TRIO 2 665 | STEELCUT TRIO 2 745 | STEELCUT TRIO 2 753 | STEELCUT TRIO 2 815

STEELCUT TRIO 2 825 | STEELCUT TRIO 2 845 | STEELCUT TRIO 2 853 | STEELCUT TRIO 2 915 | STEELCUT TRIO 2 945 | STEELCUT TRIO 2 953

AKIRA

AKIRA 13F603 | AKIRA 13F604 | AKIRA 13F605 | AKIRA 13F606 | AKIRA 13F607 | AKIRA 13F608 | AKIRA 13F609 | AKIRA 13F610

AKIRA 13F611 | AKIRA 13F612 | AKIRA 13F613 | AKIRA 13F614 | AKIRA 13F615 | AKIRA 13F616

BRAQUE

BRAQUE 13K391 | BRAQUE 13K392 | BRAQUE 13K393 | BRAQUE 13K394 | BRAQUE 13K395 | BRAQUE 13K396 | BRAQUE 13K397 | BRAQUE 13K398

CANVAS

CANVAS 13E082 | CANVAS 13E146 | CANVAS 13E151 | CANVAS 13E156 | CANVAS 13E157 | CANVAS 13E158 | CANVAS 13E159 | CANVAS 13E169

CANVAS 13E175 | CANVAS 13E188 | CANVAS 13E195 | CANVAS 13E196 | CANVAS 13E197 | CANVAS 13E199

CORRAL

CORRAL 13F525 | CORRAL 13F526 | CORRAL 13F528 | CORRAL 13F529 | CORRAL 13F531 | CORRAL 13F534 | CORRAL 13F535 | CORRAL 13F536

CORRAL 13F537

MAKI

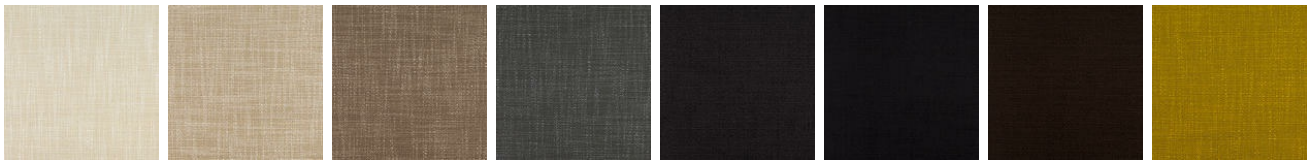

MAKI 13F111 | MAKI 13F112 | MAKI 13F113 | MAKI 13F114 | MAKI 13F115 | MAKI 13F116 | MAKI 13F118 | MAKI 13F119

MAKI 13F121

MELANGE

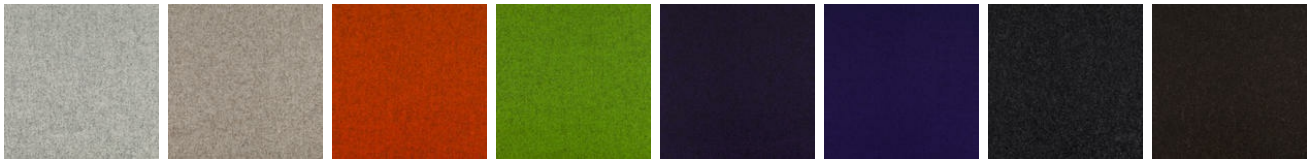

MELANGE 13O451 | MELANGE 13O452 | MELANGE 13O453 | MELANGE 13O454 | MELANGE 13O456 | MELANGE 13O457 | MELANGE 13O458 | MELANGE 13O459

MOON

MOON 13K731

MOON 13K732

MOON 13K735

MOON 13K736

MOON 13K737

MOON 13K738

MOON 13K739

MOON 13K740

MORANDI 1

BALI 13F757

BALI 13F758

BALI 13F759

CANASTA 13L340

CREPE' 13L343

DIABLO 13F760

DIABLO 13F761

MORANDI 2

ALEXANDRIA 13F751

CANASTA 13L341

HAPPY 13L342

IRIDO 13L344

MAROCCO 13F753

MAROCCO 13F754

MAROCCO 13F755

TOKYO 13F756

MORANDI 3

AIRONE 13K781

AIRONE 13K782

REGGIO 13F764

SUMAK 13F762

SUMAK 13F763

TIKY 13F752

PANAMA

PANAMA 13K545

PANAMA 13K546

PANAMA 13K547

PANAMA 13K548

PANAMA 13K549

PANAMA 13K550

PANAMA 13K551

PANAMA 13K552

PANAMA 13K554

PANAMA 13K555

PANAMA 13K556

PANAMA 13K557

REGALE

REGALE 13O411

REGALE 13O413

REGALE 13O414

REGALE 13O415

REGALE 13O416

REGALE 13O417

REGALE 13O418

REGALE 13O419

REGALE 13O421

REGALE 13O422

ROCK

ROCK 13O431 ROCK 13O432 ROCK 13O433 ROCK 13O434 ROCK 13O435 ROCK 13O436 ROCK 13O437 ROCK 13O438

ROCK 13O439 ROCK 13O440 ROCK 13O441 ROCK 13O442

SAVILLE

SAVILLE 13F416 SAVILLE 13F417 SAVILLE 13F418 SAVILLE 13F420 SAVILLE 13F421 SAVILLE 13F422

VIZIR

VIZIR 13L225 VIZIR 13L226 VIZIR 13L227 VIZIR 13L228 VIZIR 13L229 VIZIR 13L230 VIZIR 13L231 VIZIR 13L232

VIZIR 13L233 VIZIR 13L237 VIZIR 13L239 VIZIR 13L241 VIZIR 13L242 VIZIR 13L243 VIZIR 13L244 VIZIR 13L245

CHARLOT

CHARLOT 13L183 CHARLOT 13L186 CHARLOT 13L187 CHARLOT 13L188 CHARLOT 13L189 CHARLOT 13L190 CHARLOT 13L191 CHARLOT 13L192

CHARLOT 13L193 CHARLOT 13L194 CHARLOT 13L195 CHARLOT 13L196 CHARLOT 13L200 CHARLOT 13L201 CHARLOT 13L203 CHARLOT 13L204

CHARLOT 13L205 CHARLOT 13L206 CHARLOT 13L207

LEMPICKA

LEMPICKA 13F239 LEMPICKA 13F240 LEMPICKA 13F241 LEMPICKA 13F242 LEMPICKA 13F243 LEMPICKA 13F244 LEMPICKA 13F245 LEMPICKA 13F246

LEMPICKA 13F247 LEMPICKA 13F248 LEMPICKA 13F249 LEMPICKA 13F252 LEMPICKA 13F253 LEMPICKA 13F254 LEMPICKA 13F255 LEMPICKA 13F258

LEMPICKA 13F259 LEMPICKA 13F260 LEMPICKA 13F261

TONUS 3

TONUS 3 100 TONUS 3 106 TONUS 3 118 TONUS 3 119 TONUS 3 122 TONUS 3 123 TONUS 3 124 TONUS 3 128

TONUS 3 129 TONUS 3 130 TONUS 3 133 TONUS 3 135 TONUS 3 209 TONUS 3 211 TONUS 3 215 TONUS 3 216

TONUS 3 450 TONUS 3 505 TONUS 3 609 TONUS 3 610 TONUS 3 613 TONUS 3 623 TONUS 3 628 TONUS 3 633

TONUS 3 634 TONUS 3 636 TONUS 3 680 TONUS 3 740 TONUS 3 780 TONUS 3 940